PROJECT REFERENCE NO.	SHEET NO.
50138.3.FS26	2

PAVEMENT SCHEDULE

C1	PROP. APPROX. 3/4" OPEN GRADED FRICTION COURSE, TYPE FC-1 MODIFIED, AT AN AVERAGE RATE OF 84 LBS. PER SQ. YD.
C2	PROP. APPROX. 1-1/2" ASPH. CONC. SURFACE COURSE, TYPE S9.5B, AT AN AVERAGE RATE OF 168 LBS. PER SQ. YD.
V1	MILL 1 1/2" IN DEPTH
V2	MILLED RUMBLE STRIPS
U	EXISTING PAVEMENT

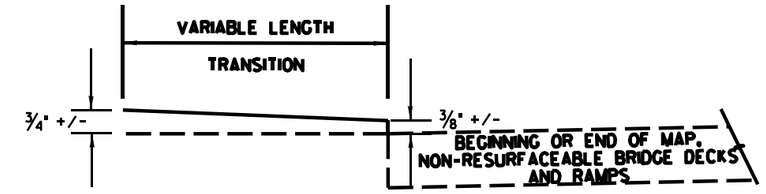

TRANSITION AREA AT BEGINING OR END OF MAP, NON-RESURFACEABLE BRIDGE DECKS AND RAMPS (USE OGAFC, TYPE FC-1 MODIFIED AS PER SECTION 650)

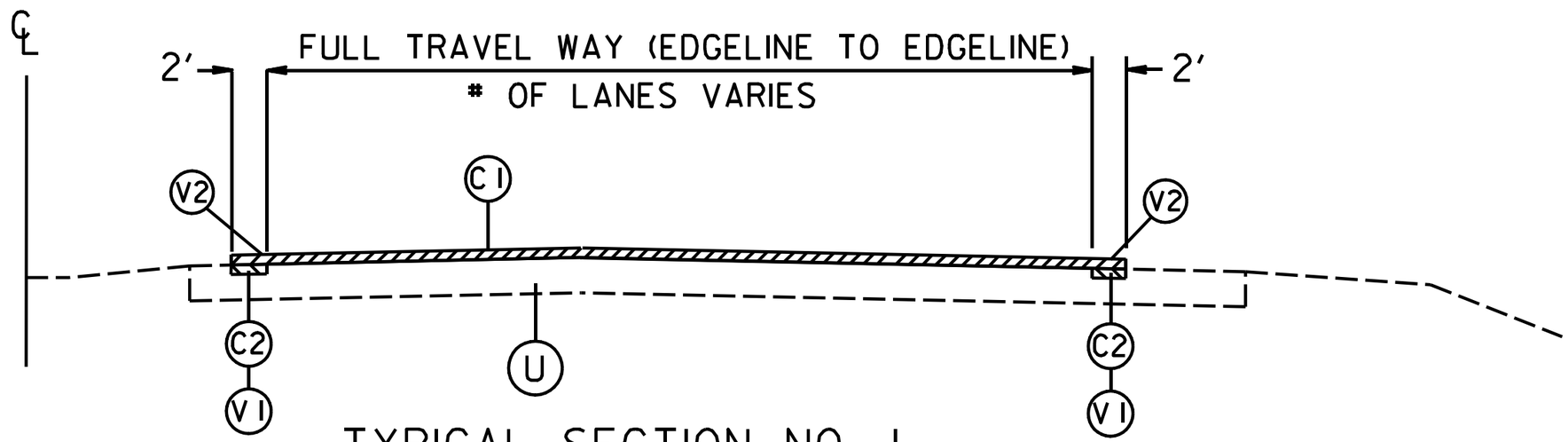

TYPICAL SECTION NO. 1

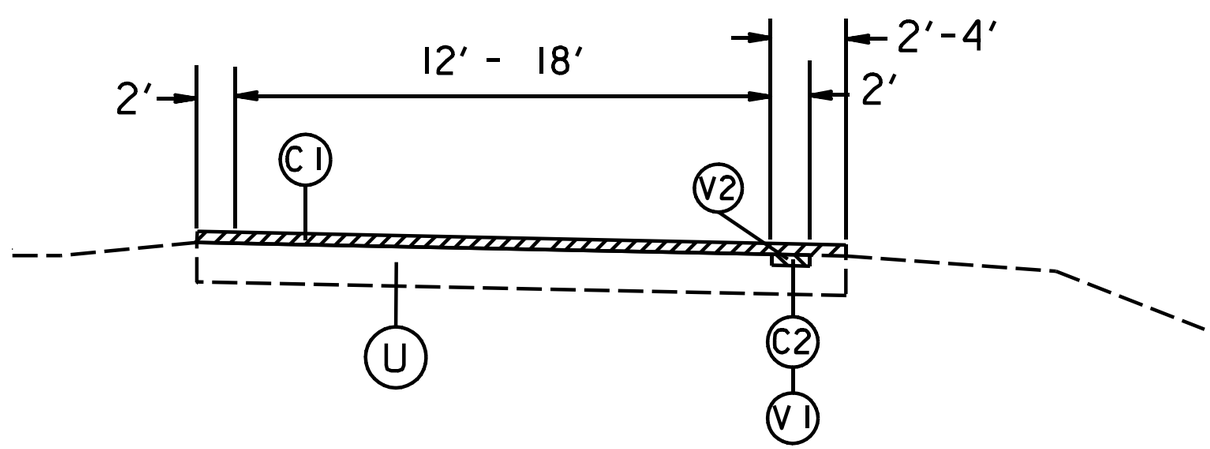

RAMP TYPICAL SECTION NO. 2